PERFEKTIUM

Lithium Batterie

6 Year Warranty PERFEKTIUM

PB-24-100-PRO

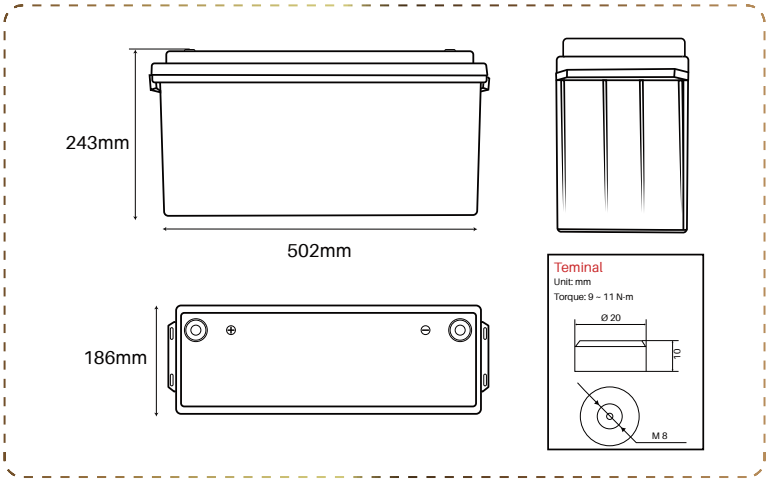

• LITHIUM BATTERY

Strong Advantages

- 6 Years Warranty
- Replacement of lead-acid battery
- Lighter weight and easier to handle
- Lithium iron phosphate is more stable
- Maximum service life of over 6000 cycles
- Long-lasting modular construction
- Screw opening, perfect crafted internal structure design

• BMS

Battery Management System

The BMS monitors and controls the individual cells of a battery and protects them from damage, such as overload and overvoltage

• BLUETOOTH 4.0 INTEGRATED

Multiple Battery Monitoring Function

Perfektium Pro APP can monitor up to 8 batteries at the same time. The SOC, voltage, current, temperature, available time of the batteries can be detective.

AVAILABLE ON Google Play

AVAILABLE ON App Store

PERFEKTIUM
Lithium Batterie

Specification

Items	Characteristics
Model	25.6V 100Ah/2560Wh
Replaces Gel-AGM battery	25.6V 200Ah
Cell type	Prismatic cell
Dimension with terminals (L x W x H)	502*186*243mm
Weight (No Accessories)	20,85Kg
Cycle Life	>6000@80%D.o.D
Internal Resistance	≤7 mΩ
Recommended Charge Voltage	29.2V
Float Charge Voltage(For standby use)	27.6±0.8V
Recommended Charge Current	30A
Max Charge Current	50A
Continuous Discharge Current	100A
Peak Discharge Cut-Off Current	300A (200~500ms)
Operating Voltage Range	20 - 29.2V
End of Discharge Voltage Range	20 - 22.4V
Terminal Type	M8
Ingress Protection Code	IP65
Charge Temperature	0~50°C
Discharge Temperature	-20~75°C
Storage Temperature	-5~35°C
Storage Condition	Charging the battery every 3 months
Series & Parallel Availability	Maximum 2 pcs in series and 4 pcs in parallel
Certifications	CE/UL/UN38.3 /MSDS /ROHS/UN 3480/ CLASS9/ECE R10

Perfektium GmbH
+49 (0)8121 2233893 info@perfektium.eu Fuggerstraße 4, 85646 Anzing, Bayern, Germany